PHOTONIC DETECTORS INC.

High-Power & Current GaAIAs Infrared Emitters
Peak Wavelength, 880 nm, Type PDI-E812

PACKAGE DIMENSIONS inch (mm)

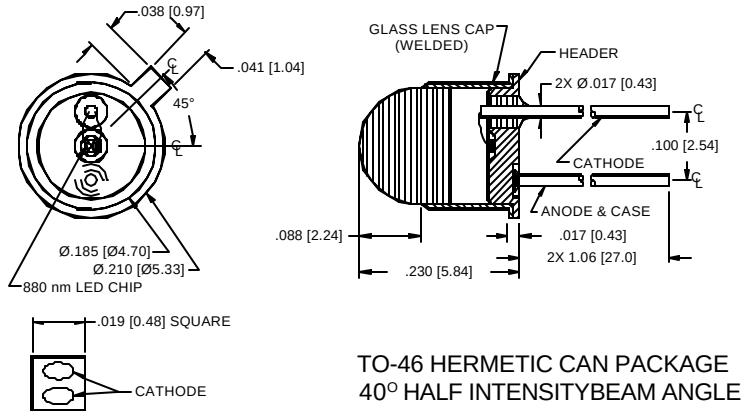

TO-46 HERMETIC CAN PACKAGE
40° HALF INTENSITYBEAM ANGLE

FEATURES
- Dual cathode
- High current
- Medium emission angle

DESCRIPTION: The **PDI-E812** infrared emitting diode uses dual cathode, high current liquid phase epitaxially grown GaAlAs. Optimized for high power, high current at 880 nm. Packaged in a TO-46 header with a glass lens cap.

APPLICATIONS
- Photoelectric switches
- Reflective switches
- Smoke detectors

ABSOLUTE MAXIMUM RATING (TA=25°C unless otherwise noted)

SYMBOL	PARAMETER	MIN	MAX	UNITS
Pd	Power Dissipation		360	mW
I_{FP}	Continuous Forward Current		180	mA
I_{FP}	Peak Forward Current (100µs pulse,10pps)		3.0	A
V_R	Reverse voltage		3.0	V
To & Ts	Storage & Operating Temperature	-65	+125	°C
TS	Soldering Temperature*		+260	°C

*1/16 inch from case for 3 secs max

TYPICAL RADIATION PATTERN

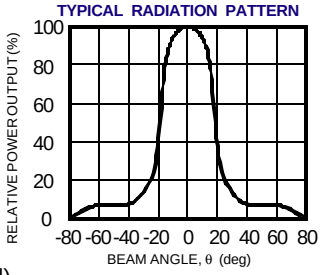

ELECTRO-OPTICAL CHARACTERISTICS (TA=25°C unless otherwise noted)

SYMBOL	CHARACTERISTIC	TEST CONDITIONS	MIN	TYP	MAX	UNITS
P_O	Output Power	I_F = 100 mA	7.0	15		mW
V_F	Forward Voltage	I_F = 100 mA		1.5	1.9	V
I_R	Reverse Current	V_R = -3.0 V			10	mA
λ_P	Peak Wavelength	I_F = 50 mA	865	880	895	nm
$D\lambda$	Spectral Halfwidth	I_F = 50 mA		80		nm
R_d	Dynamic Resistance	I_F = 100 mA		1.2		Ohm
t_r	Rise Time	I_F = 100 mA		0.6		µS
t_f	Fall Time	I_F = 100 mA		0.5		mS

POWER OUTPUT vs FORWARD CURRENT

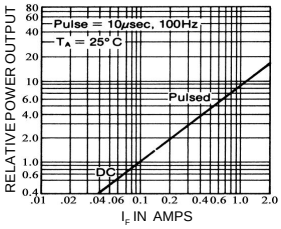

TYPICAL POWER OUTPUT DEGRADATION CURVE

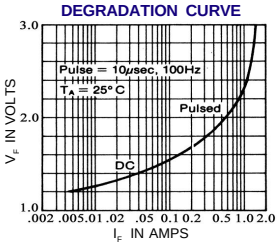

SPECTRAL OUTPUT

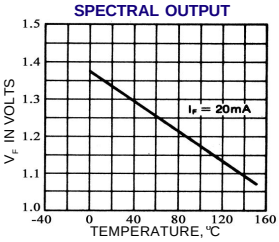

Information in this technical data sheet is believed to be correct and reliable. However, no responsibility is assumed for possible inaccuracies or omission. Specifications are subject to change without notice. Optical power and radiant intensity measured using uncapped dimpled TO-46 into integrating sphere.