REV.	DATE	ECR NO.	DESCRIPTION
NC	09/17/07	–	INITIAL RELEASE
A	06/06/12	–	ADD NOTES

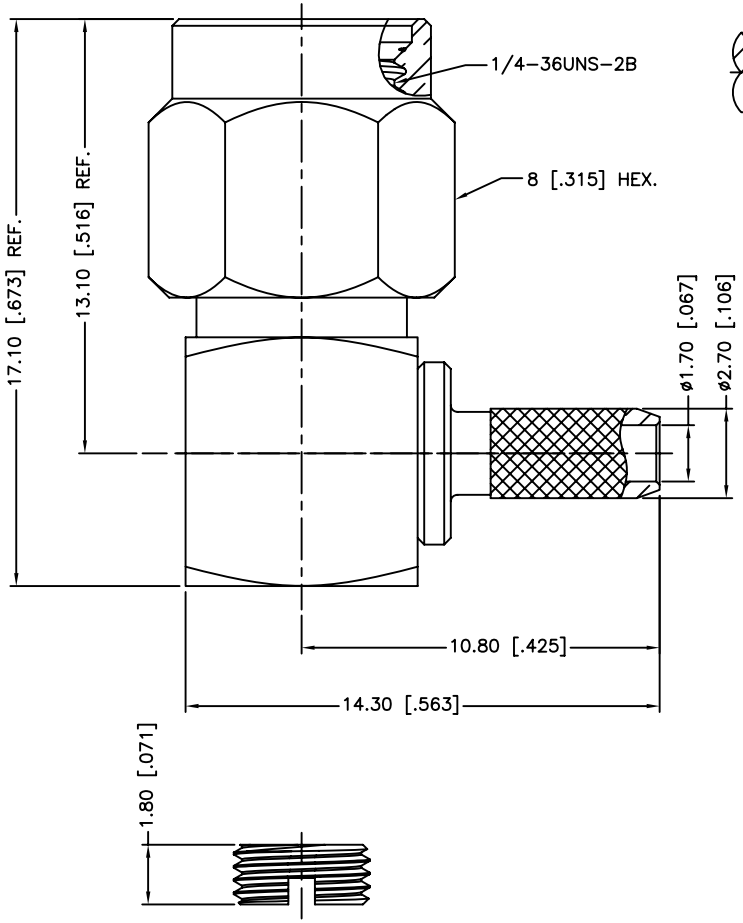

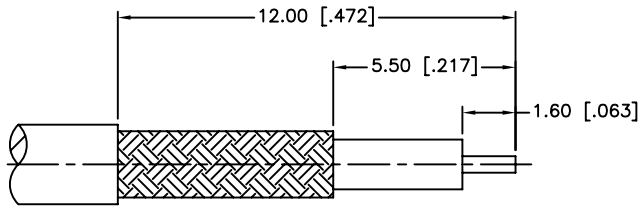

RECOMMENDED
CABLE STRIPPING DIM'S

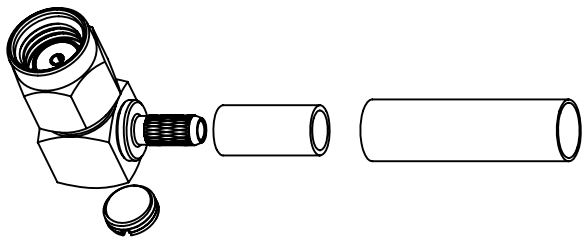

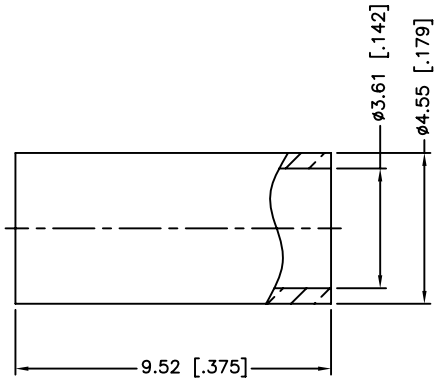

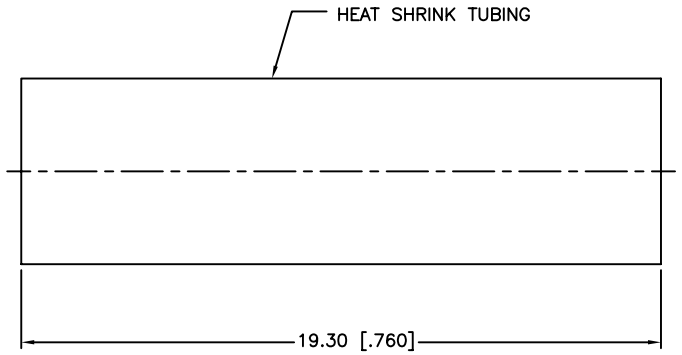

1. IMPEDANCE: 50 OHM
2. FREQUENCY RANGE: DC 0–6 GHZ
3. VSWR(RETURN LOSS): 1.3 MAX.
4. DIELECTRIC WITHSTANDING VOLTAGE: 1000 VRMS, MIN.
5. DURABILITY: 500 CYCLES MIN.
6. TEMPERATURE RANGE: –65°C TO +165°C
7. CRIMPED FERRULE
   HEX. CRIMP SIZE .151"
8. CONTACT PIN TO SOLDER

	DESCRIPTION	MATERIAL	FINISH	QTY
9	HEAT SHRINK TUBING		BLACK	1
8	FERRULE	COPPER	GOLD	1
7	COVER	BRASS	GOLD	1
6	GASKET	SILICON RUBBER	RED	1
5	RETAINER RING	SUS 304	NATURAL	1
4	CONTACT PIN	BERYLLIUM COPPER	GOLD	1
3	INSULATOR	PTFE	NATURAL	1
2	HOUSING WITH BARREL	BRASS	GOLD	1
1	SHELL	BRASS	GOLD	1

UNLESS OTHERWISE SPECIFIED DIMENSIONS ARE IN MILLIMETERS. DIMENSIONS IN [ ] ARE IN INCHES AND FOR CUSTOMER REFERANCE ONLY.

UNLESS OTHERWISE SPECIFIED TOLERANCES FOR MILLIMETERS ARE:
0.5 – 8mm ± 0.20mm
8 – 30mm ± 0.40mm
30 – 120mm ± 0.50mm

UNLESS OTHERWISE SPECIFIED TOLERANCES FOR INCHES ARE:
.020 – .315 = ± 0.007"
.315 – 1.180 = ± 0.015"
1.180 – 4.724 = ± 0.020"

DO NOT SCALE DRAWING

APPROVALS		DATE
DRAWN	M.ZHANG	06/06/12
CHECKED		
ISSUED		
SHEET	1 OF 1	

CAD FILE C:/CONNEX/132182RP.DWG

Amphenol Connex

PART DESCRIPTION
SMA REVERSE POLARITY R/A CRIMP PLUG
(FOR RG–316U/D,188A/U DOUBLE BRAID CABLE)

PART NO. 132182RP

DWG. NO. 132182RP.DWG | REV. A | SIZE A | SCALE NA