THIS DRAWING IS UNPUBLISHED. RELEASED FOR PUBLICATION 20
© COPYRIGHT 20 BY TYCO ELECTRONICS CORPORATION. ALL RIGHTS RESERVED.

LOC	DIST
A	66

REVISIONS

P	LTR	DESCRIPTION	DATE	DWN	APVD
	A	RELEASED	04DEC2007	RK	TE

PART NUMBER	REV	FIRST USED	POWER UNIT	FEED TYPE
1852593-1	A	122500-1	LEADMAKER & BENCH MODEL G	POST FEED
1852593-2	A	565435-5	BENCH MODEL K	POST FEED
7-1852593-7	A	-	SPARE PARTS	-

1. RECOMMENDED SPARE PARTS
2. GREASE LIGHTLY
3. GUARD MUST BE IN PLACE WHEN OPERATING APPLICATOR IN A BENCH MACHINE

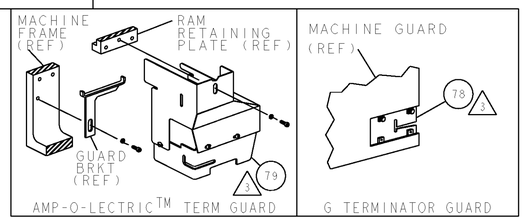

TERMINAL NAME: RECEPTACLE, POSITIVE LOCK, 6.35 [.250] SERIES					
1742630	-	TE TERMINAL - TE CRIMP SPECS			
-	-				
-	-	PAD LTR	CRIMP HEIGHT		WIRE SIZE
-	-	A	1.24±0.05mm[.049±.002]		18AWG
-	-	B	1.12±0.05mm[.044±.002]		20AWG
-	-	C	1.07±0.05mm[.042±.002]		22AWG
-	-	D	-		-
-	-	CRIMP	SIZE	TYPE	RANGE
-	-				
-	-	WIRE	2.03mm [.080]	F	22-18 AWG
-	-	INSUL	4.57mm [.180]	F	Ø2.29-3.94mm
WIRE STRIP LENGTH 4.39-5.17mm	TERM APPL SPEC 114-2074	FEED 21.46mm	APPL INSTRUCTIONS 408-8039	SET UP GAGE 458638-1	

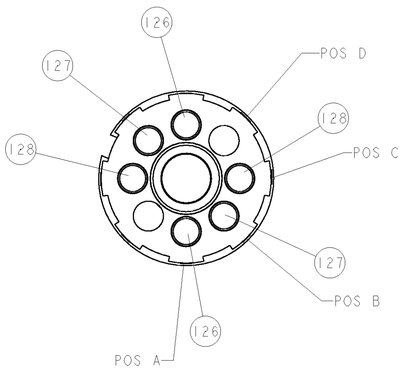

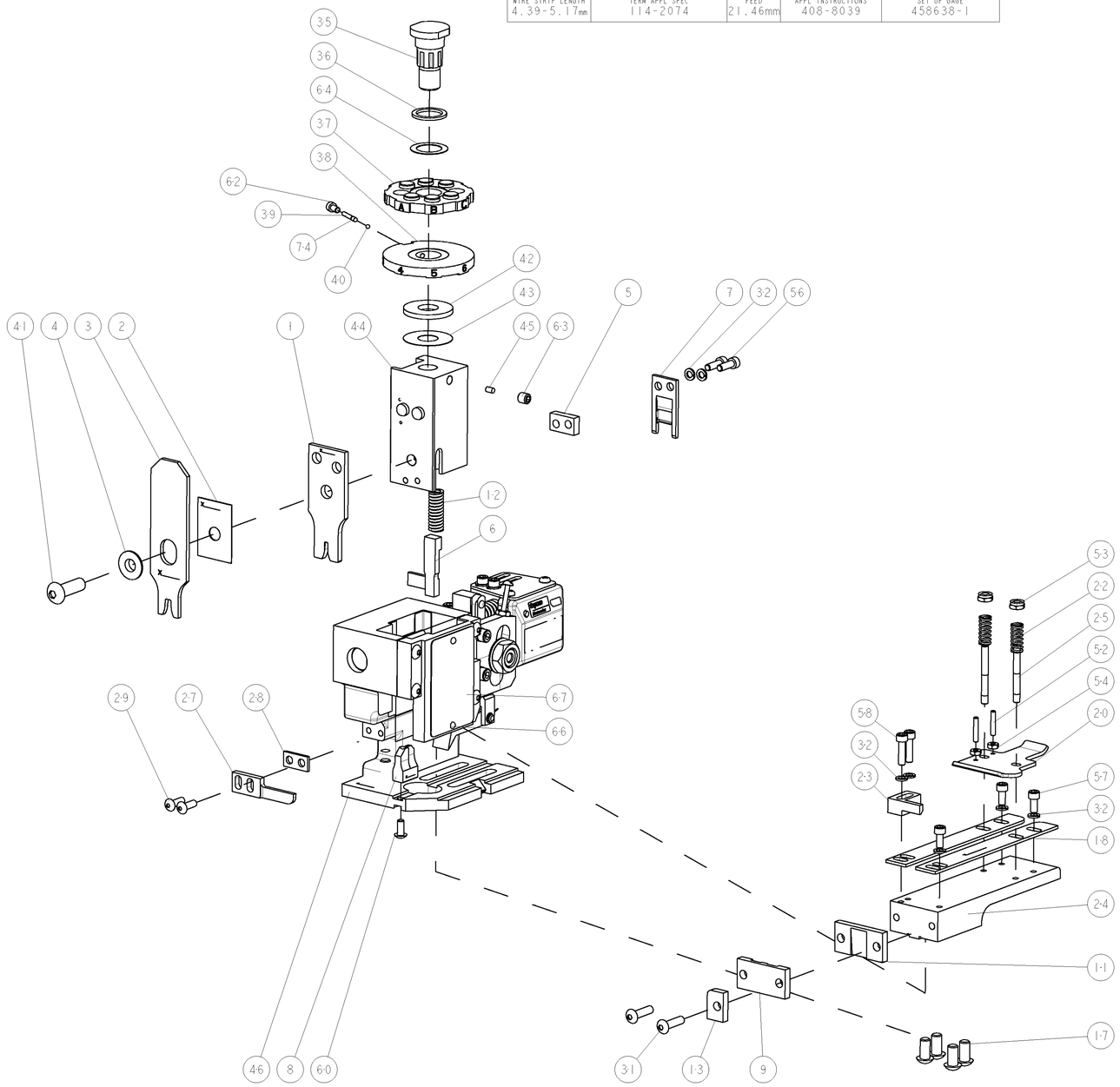
35
36
64
37
38
62
39
74
40
42
43
45
63
5
7
32
56
41
4
3
2
1
44
12
6
67
66
53
22
25
52
54
20
58
57
28
32
23
57
32
18
24
17
13
12
11
10
9
17
3
2
29
31
56
28
27
25
24
23
22
20
18
17
13
12
11
10
9
8
7
6
5
4
3
2
1
29
31
28
27
25
24
23
22
20
18