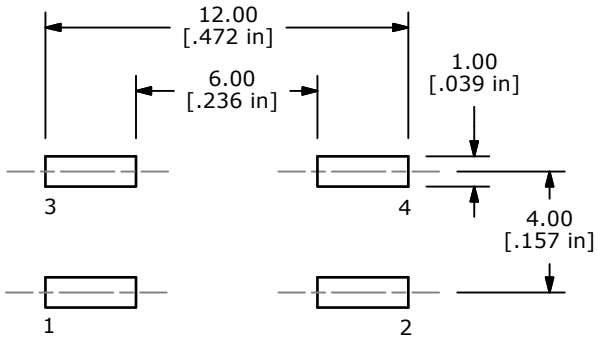

P.C.B. MOUNTING LAYOUT

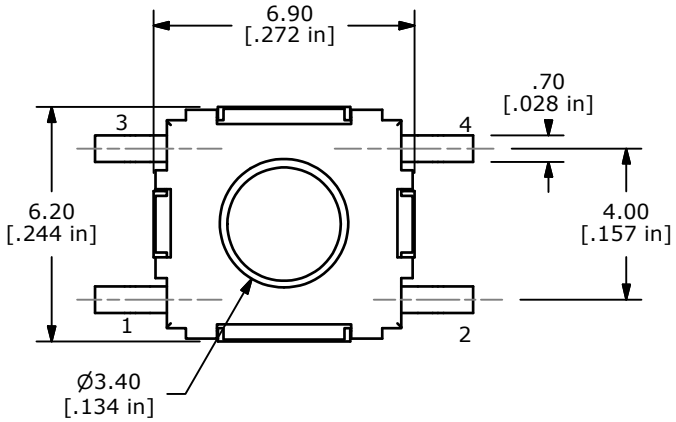

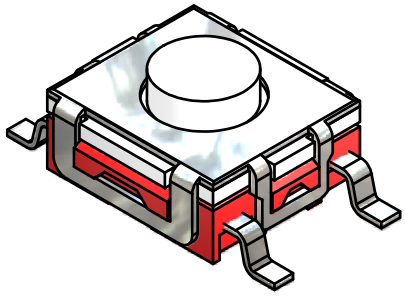

ISOMETRIC

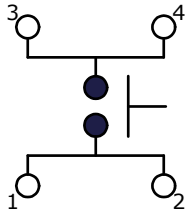

CIRCUIT: SPST

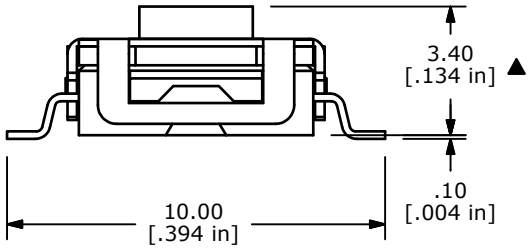

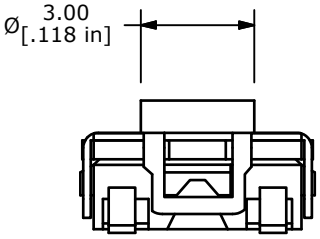

NOTES:
1. GENERAL TOLERANCE: x.x ± 0.4
   x.xx ± 0.25
2. RATING: 50mA@12VDC
3. TRAVEL: 0.35±0.2mm
4. CONTACT RESISTANCE: 100m OHMS
5. (B) LIFE CYCLES: 500,000 CYCLES
6. ▲ OPERATING FORCE: 160± 50gf
7. ▲ DENOTES CRITICAL PARAMETER
8. PACKAGE: TAPE AND REEL, 1400 PIECES PER REEL
9. 2002/95/EC (ROHS) COMPLIANT
10. ▲ CONTACT MATERIAL: SILVER

REV	PCR NO	DESCRIPTION	DATE	BY
B	20290	CORRECT LIFE NOTE	11/17/11	BMA
A	16657	RELEASED FOR PRODUCTION	11/14/2006	TN

THE INFORMATION CONTAINED IN THIS DOCUMENT IS PROPRIETARY TO E-SWITCH AND IS NOT TO BE COPIED OR TRANSFERRED

E-SWITCH®

TITLE TL6700AF160QG

SCALE	DATE	DR	DWG	REV
5:1	11/14/2006	TN	P010463	B