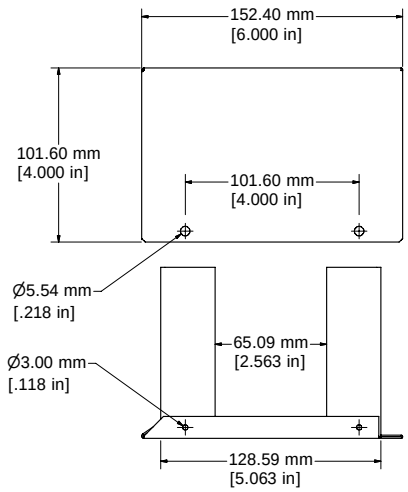

ASSEMBLY SIDE VIEW EXPLODED

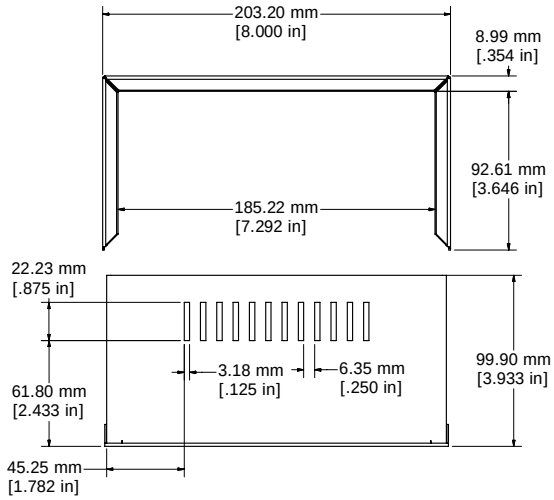

ASSEMBLY - REAR VIEW EXPLODED

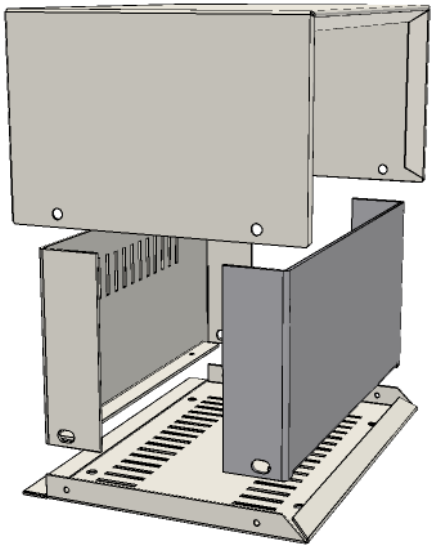

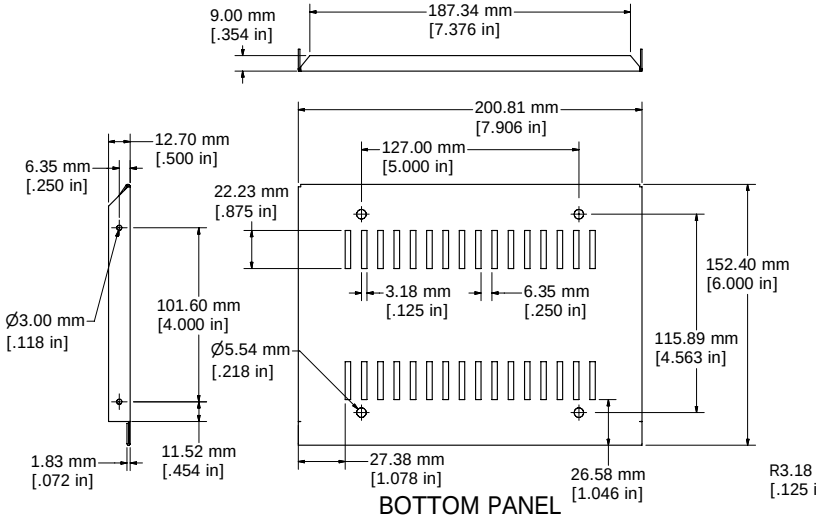

BOTTOM PANEL

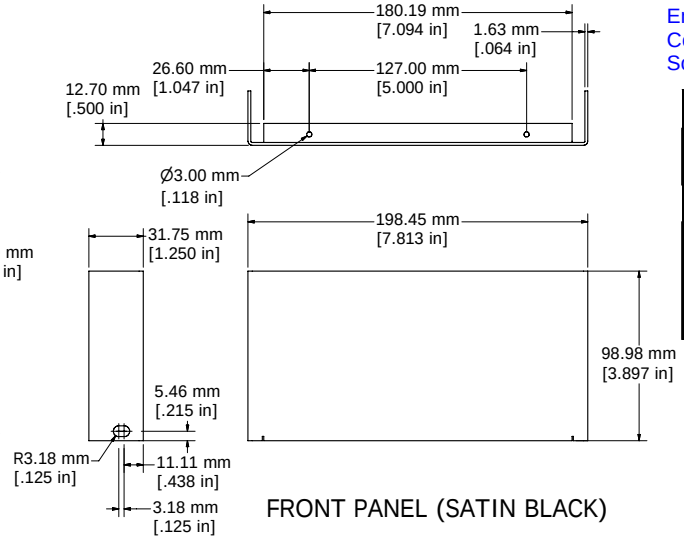

FRONT PANEL (SATIN BLACK)

Enclosures can be Factory Modified (Milling, Drilling, Printing etc.)
Contact Factory mjm@hammondmfg.com for quotes
Solid models of this enclosure available in STEP or IGES.

1426M / 1426M-B	
1426M - Case/Rear Panel Off White	
1426M-B - Case/Rear Panel Satin Blue	
Screws / Feet	
Screws 4 - 6-32 x 1/4 self tapping	
Feet 4 - Self Adhesive Rubber Feet	
Replacement Screws	1421J6
Replacement Rubber Feet	1421T9

HAMMOND MANUFACTURING™

1426M/1426M-B

www.hammondmfg.com