THIS DRAWING IS UNPUBLISHED. RELEASED FOR PUBLICATION 20
© COPYRIGHT 20 BY TYCO ELECTRONICS CORPORATION, ALL RIGHTS RESERVED.

LOC	DIST
GP	00

REVISIONS

P	LTR	DESCRIPTION	DATE	DWN	APVD
	B	REDRAWN PER ECO-10-012356	12NOV2010	CJV	EJB

1. HOUSINGS: POLYESTER, UL 94V-0 RATED, NATURAL
   SIGNAL AND SIGNAL GROUND CONTACTS: COPPER ALLOY
   UTILITY CONTACTS: PHOSPHOR BRONZE
2. UTILITY CONTACTS: 0.76um MIN GOLD IN CONTACT AREA,
   2.54um MIN TIN ON PCB TAILS, OVER 1.27um MIN NICKEL OVER ALL.
   SIGNAL AND SIGNAL GROUND CONTACTS: 0.76um MIN GOLD IN CONTACT AREA,
   2.54um MIN TIN ON PCB TAILS, OVER 1.27um MIN NICKEL OVER ALL.
3. ROWS A, C, D, AND F ARE SIGNAL CONTACTS. ROWS B AND E ARE SIGNAL GROUND CONTACTS.
4. DIMENSIONS PER CUSTOMER BOARD LAYOUT.
5. SEE UTILITY CONTACT SEQUENCE TABLE FOR LOCATION AND LEVEL/LENGTH OF UTILITY CONTACTS FOR EACH PRODUCT PART NUMBER. UTILITY LEVEL 1 CAN BE USED FOR SENSING. UTILITY LEVELS 2, 3, AND 4 CAN BE USED FOR POWER, GROUND, OR ESD. SEQUENCING SHOWN IN SECTION E-E SHOWS THREE LEVELS FOR COMPARISON. UTILITY LEVEL 2 EQUALS THE SIGNAL GROUND CONTACT LEVEL. SIGNAL LEVEL IS BETWEEN UTILITY LEVELS 1 AND 2.
6. BLOCK DIAGRAM AND CONTACT IDENTIFICATION APPLY TO COPLANAR NON-INVERTED APPLICATION ONLY. CONTACT IDENTIFICATION REVERSES FOR INVERTED APPLICATIONS, I.E COPLANAR OR MID-BOARD INVERTED.
7. COMPANY LOGO IN APPROXIMATE AREA SHOWN.

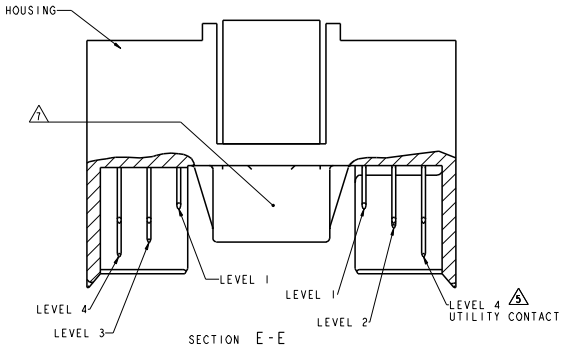

SECTION E-E

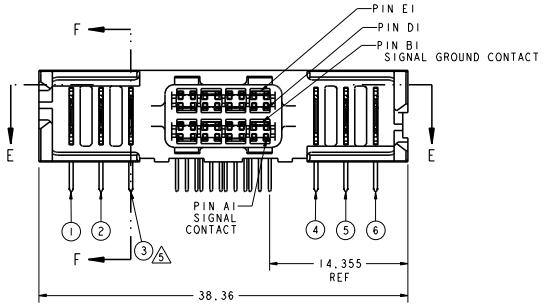

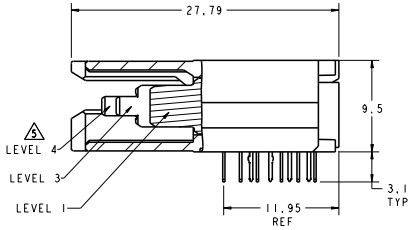

SECTION F-F

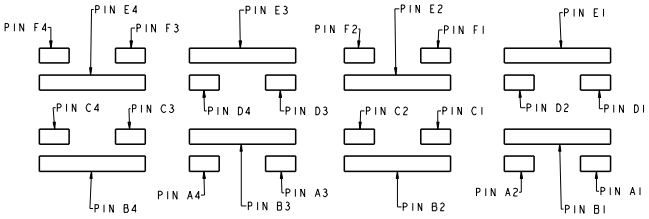

BLOCK DIAGRAM
MATING FACE CONFIGURATION

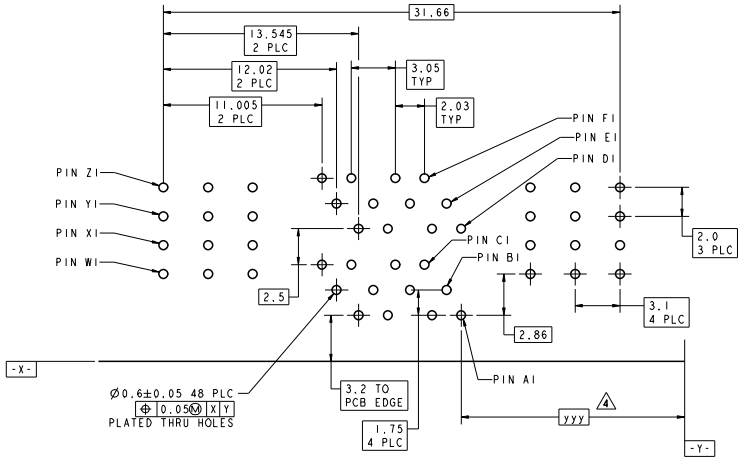

RECOMMENDED PC BOARD FOOTPRINT
COMPONENT SIDE SHOWN
SCALE 6:1

5 UTILITY CONTACT SEQUENCE TABLE UTILITY CONTACT LEVEL 1, 2, 3, OR 4						
1	2	4	4	2	2	6367551-2
4	3	2	2	3	4	6367551-1
1	2	3	4	5	6	PART NUMBER
UTILITY CONTACT LOCATION						

TYCO ELECTRONICS CORPORATION RECEIVES ANY INTELLECTUAL PROPERTY RIGHTS IN THIS DRAWING BY VIRTUE OF ITS ACCEPTANCE OR USE OF THIS DRAWING OR THE INFORMATION CONTAINED IN IT. THIS DRAWING IS TO BE RETURNED UPON REQUEST.

DIMENSIONS: mm

TOLERANCES UNLESS OTHERWISE SPECIFIED:
0 PLC ±-
1 PLC ±0.3
2 PLC ±0.25
3 PLC ±-
4 PLC ±-
ANGLES ±-

MATERIAL 1
FINISH 2

DWN C. VALENTINE	12NOV2010	Tyco Electronics, Harrisburg, PA 17105-3608
CHK E. BRIANT	12NOV2010	
APVD E. BRIANT	12NOV2010	NAME Z-DOK+ ADAPTER BOARD CONNECTOR ASSEMBLY, 8 SIGNAL DIFF. PAIR, 3 UTILITY CONTACTS PER SIDE
PRODUCT SPEC 108-1985		
APPLICATION SPEC 114-13068		SIZE A1 · CAGE CODE 00779 · DRAWING NO C-6367551 · RESTRICTED TO -
WEIGHT -		
CUSTOMER DRAWING		SCALE 4:1 · SHEET 1 OF 1 · REV B

AMP 4605 REV 31MAR2000