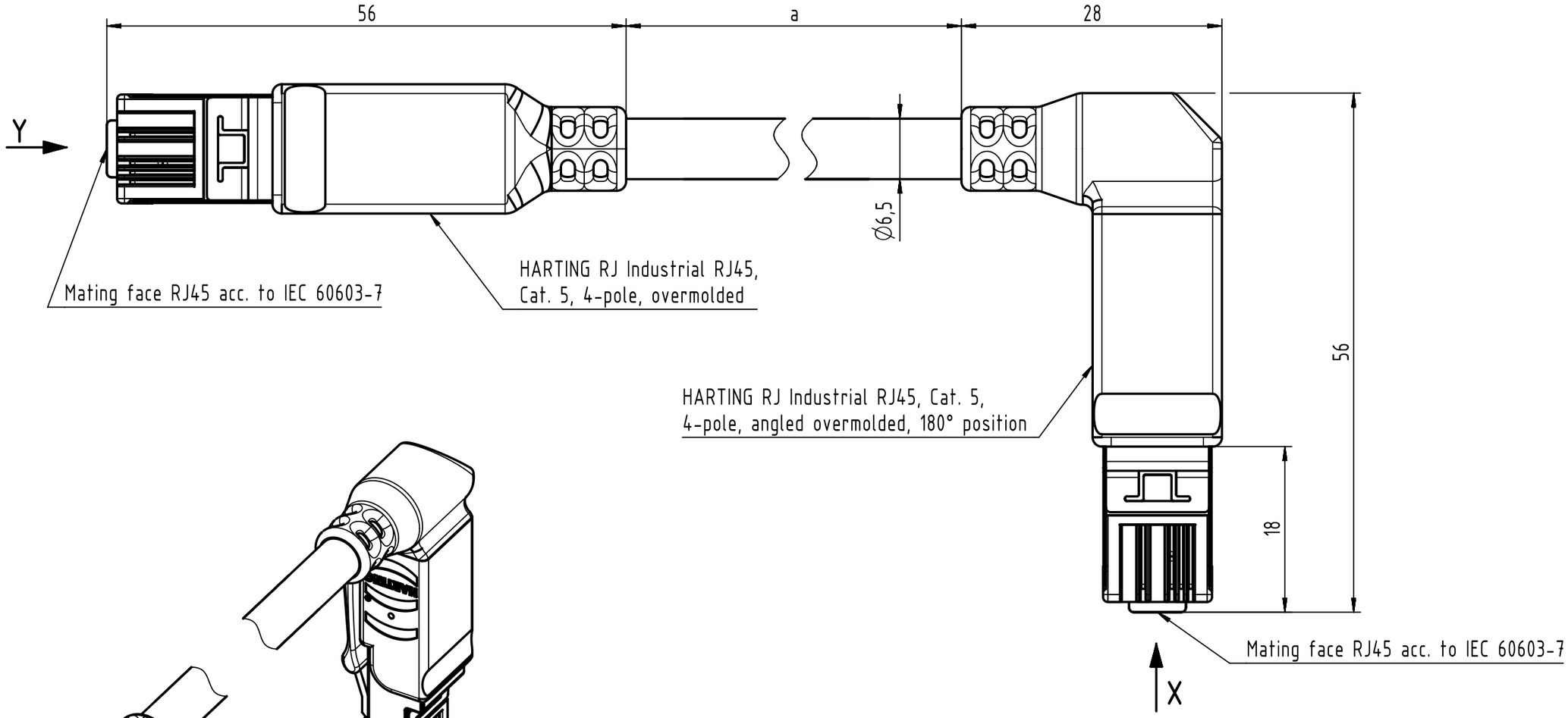

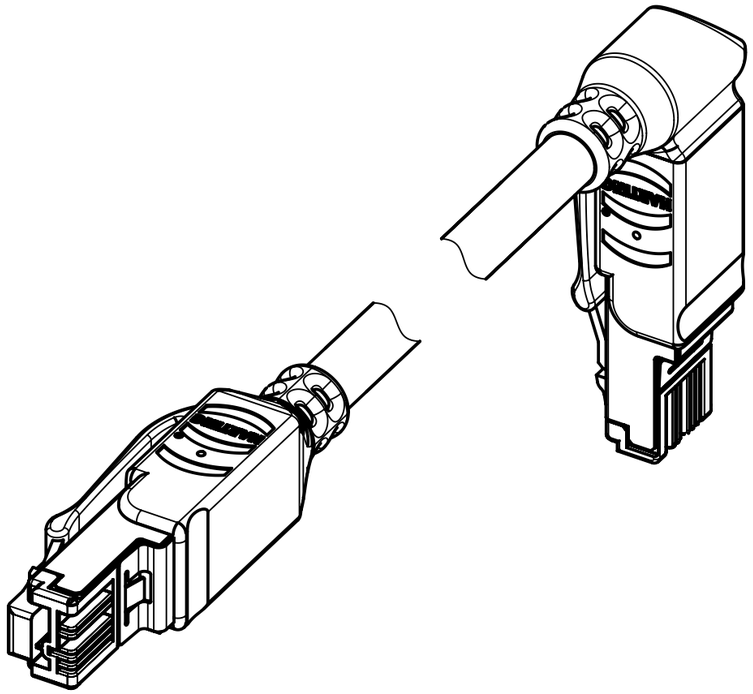

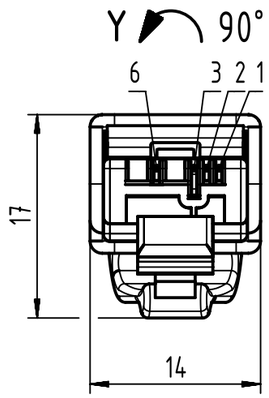

Loading-Plan:

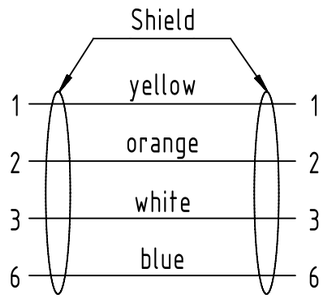

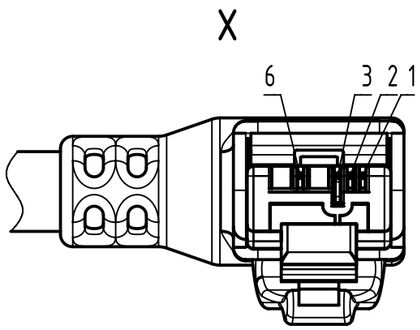

- Protection level: IP20
- Temperature range: -40°C ... +70°C

All Dimensions in mm Original Size DIN A3	Scale 2:1	Free size tol.		Ref. Sub.	
All rights reserved Department EC PD - RO	Created by MUNTEANV	Inspected by AVRAM	Standardisation HOFFMANN	Date 2016-05-11	State Final Release
HARTING Electronics GmbH D-32339 Espelkamp	Title RJ Industrial Cable Assembly				Doc-Key / ECM-Nr. 100155365/UGD/004/E 500000104298
	Type TB	Number 09470502XXX		Rev. E	Page 1/2

A3

Cont. no.	Part no.	Type of cable	Dim a[m]
53	09470502093	RJI Ethernet trailing cable, AWG22/7, 2x2x0.75, PUR, Cat. 5+, green	1.8
52	09470502092		1.6
51	09470502047		1.5
50	09470502098		1.45
49	09470502096		1.4
48	09470502097		1.25
47	09470502046		1
46	09470502045		0.5
45	09470502044	RJI Ethernet stranded cable, 4xAWG22/7, PVC, Cat. 5+, green	100
44	09470502043		90
43	09470502042		80
42	09470502041		70
41	09470502040		60
40	09470502039		50
39	09470502038		40
38	09470502037		30
37	09470502036		20
36	09470502035		15
35	09470502034		10
34	09470502033		9
33	09470502032		8
32	09470502031		7
31	09470502030		6
30	09470502029		5
29	09470502028		4
28	09470502027		3
27	09470502026		2
26	09470502025		1.5
25	09470502024		1
24	09470502091		0.8
23	09470502023		0.5
22	09470502022	RJI Ethernet standard cable, AWG22/1, 2x2x0.64, PVC, Cat. 5+, green	100
21	09470502021		90
20	09470502020		80
19	09470502019		70
18	09470502018		60
17	09470502017		50
16	09470502016		40
15	09470502015		30
14	09470502014		20
13	09470502013		15
12	09470502012		10
11	09470502011		9
10	09470502010		8
9	09470502009		7
8	09470502008		6
7	09470502007		5
6	09470502006		4
5	09470502005		3
4	09470502004		2
3	09470502003		1.5
2	09470502002		1
1	09470502001		0.5

Cont. no.	Part no.	Type of cable	Dim. a[m]
98	09470502088	RJI Ethernet stranded cable, AWG22/7, 2x2x0.75, outdoor, PVC, Cat. 5+, black	100
97	09470502087		90
96	09470502086		80
95	09470502085		70
94	09470502084		60
93	09470502083		50
92	09470502082		40
91	09470502081		30
90	09470502080		20
89	09470502079		15
88	09470502078		10
87	09470502077		9
86	09470502076		8
85	09470502075		7
84	09470502074		6
83	09470502073		5
82	09470502072		4
81	09470502071		3
80	09470502070		2
79	09470502069		1.5
78	09470502068		1
77	09470502067		0.5
76	09470502066	RJI Ethernet trailing cable, AWG22/7, 2x2x0.75, PUR, Cat. 5+, green	100
75	09470502065		90
74	09470502064		80
73	09470502063		70
72	09470502062		60
71	09470502061		50
70	09470502060		40
69	09470502059		30
68	09470502058		20
67	09470502057		15
66	09470502089		13
65	09470502090		12
64	09470502056		10
63	09470502055		9
62	09470502054		8
61	09470502053		7
60	09470502052		6
59	09470502051		5
58	09470502050		4
57	09470502049		3
56	09470502095		2.4
55	09470502094		2.2
54	09470502048		2

All Dimensions in mm
Original Size DIN A3

Scale 1:1

Free size tol.

Ref.

Sub.

All rights reserved

Department EC PD - RO

HARTING Electronics GmbH
D-32339 Espelkamp

Created by	Inspected by	Standardisation	Date	State
MUNTEANV	AVRAM	HOFFMANN	2016-05-11	Final Release

Title RJ Industrial Cable Assembly

Doc-Key / ECM-Nr. 100155365/UGD/004/E 500000104298

Type TB

Number 09470502XXX

Rev. E

Page 2/2

A3