PART NUMBER	REV	FIRST USED
680263-1	E	122500-1
680263-2	E	565435-5

TERMINAL NAME: CONNECTOR CLIP

AMP P/N	MFG P/N
356023	50932

CRIMPING DATA (5)

PAD LTR	CRIMP HEIGHT (WIRE)	PAD NO	CRIMP HEIGHT (INSUL)	WIRE SIZE
A	.115 ±.005 [2.92 ±0.13mm]	5	.167 ±.005 [4.24 ±0.13mm]	10
B	.109 ±.005 [2.77 ±0.13mm]	4	.161 ±.005 [4.09 ±0.13mm]	12
C	.104 ±.005 [2.64 ±0.13mm]	6	.137 ±.005 [3.48 ±0.13mm]	14
D	.099 ±.005 [2.51 ±0.13mm]	8	.117 ±.005 [2.97 ±0.13mm]	16

CRIMP	SIZE	TYPE	RANGE
WIRE	.200 [5.08mm]	OVERLAP	16-10
INSUL	.275 [6.99mm]	OVERLAP	Ø.167 MAX

WIRE STRIP LENGTH	TERM APPL SPEC	FEED	APPL INSTRUCTION	SET UP GAGE	LAYOUT
.250-.280	NONE	.773	408-8040	458637-1	L1733

USED ON _

-1	LEADMAKER OR BENCH MODEL G	AIRFEED
-2	BENCH MODEL K	AIRFEED

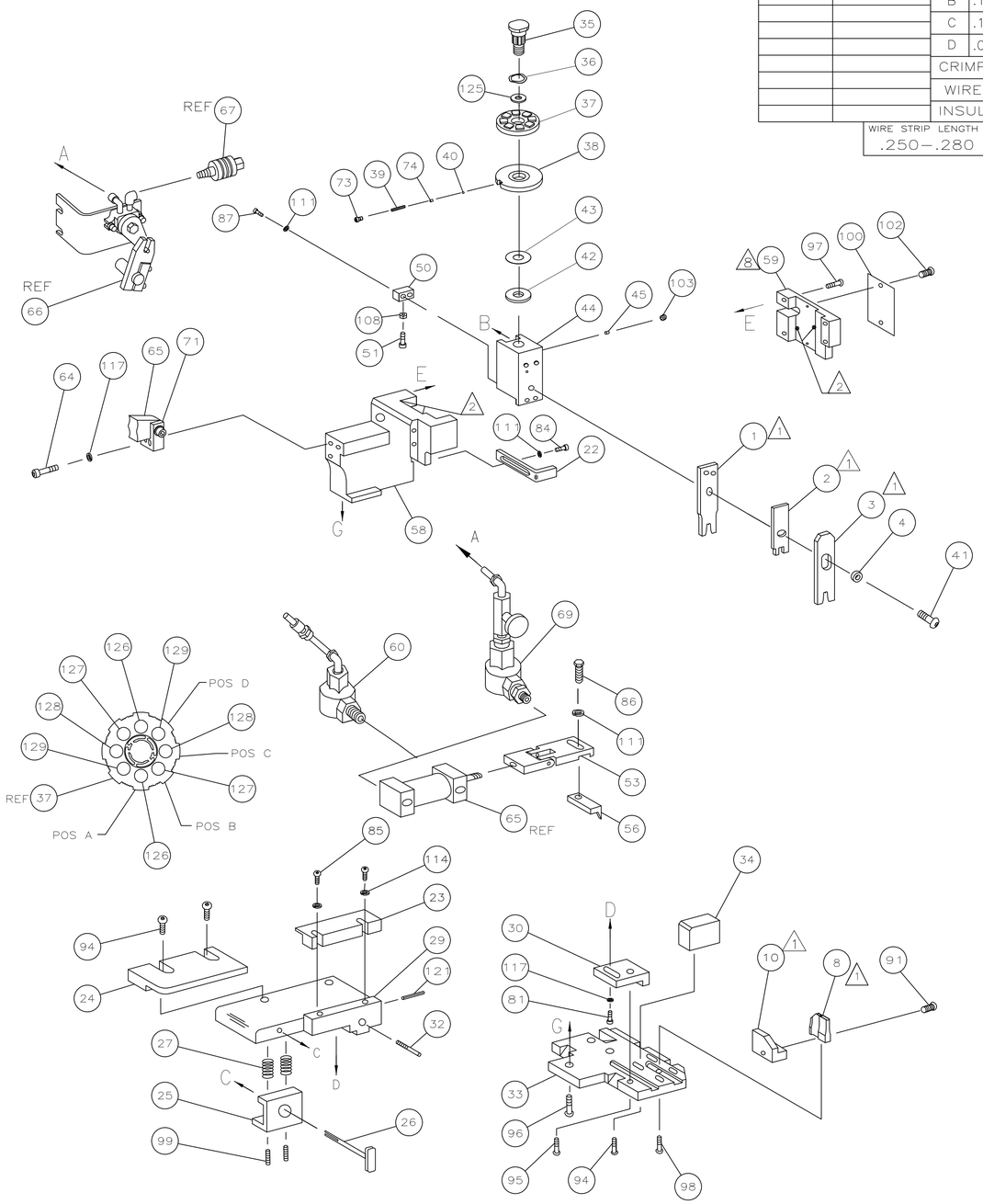

-2	-1	U/M	PART NO	DESCRIPTION	ITEM NO
2	2	-	7-354778-7	PIN, WIRE DISC (.2880)D	129
2	2	-	6-354778-9	PIN, WIRE DISC (.2840)C	128
2	2	-	5-354778-7	PIN, WIRE DISC (.2780)B	127
2	2	-	5-354778-1	PIN, WIRE DISC (.2750)A	126
1	1	-	986950-1	WASHER, FLAT PRECISION	125
1	1	-	217238-1	DOCUMENTATION PACKAGE	124
1	1	-	4088040	SF APPL INST 408-8040	123
					122
1	1	-	3-21028-8	PIN,SLT SPR(Ø.093X.62)ST GDE PL	121
					120
					119
					118
3	3	-	21024-5	WASHER, LOCK(#10)ADJ BLOCK	117
					116
					115
2	2	-	21024-2	WASHER,LOCK(#4)FRONT STP GUIDE	114
					113
					112
4	4	-	21024-4	WASHER,LOCK(#8)STRIPPER	111
					110
					109
1	1	-	21018-5	NUT,HEX(NO.6)HOLDDOWN	108
					107
					106
					105
					104
1	1	-	21009-2	SCR,SKT SET(1/4-20x.25 LW)RAM	103
2	2	-	21017-2	SCR,DRIVE(#2x.19)ID PLATE	102
					101
1	1	-	461264-1	PLATE, IDENTIFICATION	100
2	2	-	5-21006-6	SCR,SET(10-32x.75)DRAG	99
1	1	-	22733-8	SCR,BHC(8-32x.38 LW)ANVIL	98
4	4	-	2-21002-9	SCR,BHC(10-32x.75)CAP	97
3	3	-	2-22733-8	SCR,BHC(1/4-20x.62)HSG	96
1	1	-	2-21002-7	SCR,BHC(10-32x.50)SG ADJ BLK	95
4	4	-	2-21002-2	SCR,BHC(8-32x.50)TERM H DWN	94
					93
					92
1	1	-	2-21000-9	SCR,SHC(8-32x.75)REAR SHEAR	91
					90
					89
					88
(6) 2	2	-	2-21000-7	SCR,SHC(8-32x.48)DEP-HOLD	87
1	1	-	2-22603-1	SCR,HEX HD(8-32x.38)FEED FINGER	86
2	2	-	1-21000-5	SCR,SHC(4-40x.50)F ST GUIDE	85
1	1	-	2-21000-7	SCR,SHC(8-32x.50)STRIPPER	84
					83
					82
1	1	-	3-21000-4	SCR,SHC(10-32x.38)SG ADJ BL	81
					80
(3) 1	-	-	462992-7	GUARD ASSY	79
(7)(3) -	REF	-	679532-1	INSERT, GUARD	78
					77
					76
					75
1	1	-	690603-1	SPRING, ASSIST	74
1	1	-	23030-1	SCR,SHC(6-32x.25 SL)INS DISC	73
					72
1	1	-	459610-3	MOUNT, FEED BRACKET	71

QTY REQD PER ASSY — PARTS LIST

-2	-1	U/M	PART NO	DESCRIPTION	ITEM NO
					70
(4) 1	-	-	692655-5	AIR FEED VALVE ASSY	69
					68
REF	-	-	24042-2	VALVE, SHUT OFF	67
REF	-	-	692655-6	AIR FEED VALVE ASSY	66
(4) 1	1	-	461065-1	AIR FEED ASSY (1 INCH)	65
2	2	-	3-21000-9	SCR,SHC(10-32x1.00)AIR ASSY	64
					63
					62
					61
-	1	-	692655-7	AIR FEED VALVE ASSY	60
1	1	-	454220-1	CAP, RAM	59
1	1	-	356487-1	HOUSING	58
					57
1	1	-	694433-8	PAWL, FEED	56
					55
					54
(4) 1	1	-	461062-1	FEED FINGER ASSY	53
					52
1	1	-	811242-2	BUMPER, HOLDDOWN	51
1	1	-	690753-1	SPACER, TONKER	50
					49
					48
					47
					46
1	1	-	690191-1	PLUG, NYLON	45
1	1	-	455673-4	RAM	44
1	1	-	690125-1	WASHER, LAMINATED	43
1	1	-	1-690124-0	WASHER, RAM	42
1	1	-	690686-1	BOLT, CRIMPER(5/16x1.00)	41
1	1	-	23241-6	BALL, STEEL	40
1	1	-	690170-1	SPRING, COMPRESSION	39
1	1	-	690142-5	DISC, INSULATION	38
1	1	-	354777-1	WIRE DISC, PLASTIC	37
1	1	-	22480-5	WASHER, SPRING	36
1	1	-	690212-1	POST, RAM	35
1	1	-	690786-1	SUPPORT, TERMINAL	34
1	1	-	455675-1	PLATE, BASE	33
1	1	-	690432-3	SCREW, ADJUSTMENT	32
					31
1	1	-	455689-1	BLOCK, STRIP GUIDE ADJ	30
1	1	-	3-455671-2	PLATE, STRIP GUIDE	29
					28
2	2	-	1-22284-0	SPRING, DRAG	27
1	1	-	690546-1	LEVER, DRAG RELEASE	26
1	1	-	2-690754-2	DRAG, TERMINAL	25
1	1	-	7-690440-6	GUIDE, STRIP (REAR)	24
1	1	-	189124-4	GUIDE, STRIP (FRONT)	23
1	1	-	690472-2	STRIPPER	22
					21
					20
					19
					18
					17
					16
					15
					14
					13
					12
					11
1	1	-	853714-2	PLATE, REAR SHEAR	10
					9
(1) 1	1	-	318919-1	ANVIL	8
					7
					6
					5
1	1	-	2-238009-5	SPACER, BLOCK CRIMPER	4
(1) 1	1	-	318903-1	CRIMPER, INSULATION	3
1	1	-	1633967-1	BLADE, SLUG	2
(1) 1	1	-	318904-1	CRIMPER, WIRE	1

QTY REQD PER ASSY — PARTS LIST

(1) RECOMMENDED SPARE PARTS.

(2) GREASE LIGHTLY.

(3) GUARD MUST BE IN PLACE WHEN OPERATING APPLICATOR IN A BENCH MACHINE.

(4) SEE DRAWING FOR COMPONENTS

(5) TERMINAL — CRIMP HEIGHT

(6) CUT TO LENGTH AT ASSY

(7) ITEM 79 IS FOR BENCH MODEL G ONLY.

(8) REMOVE ITEM 59, TO REMOVE APPLICATOR RAM FROM HOUSING.

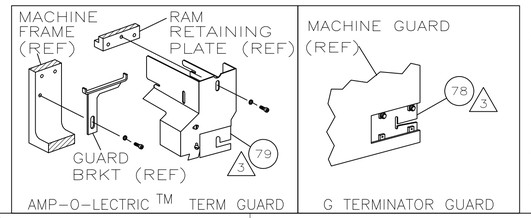

P	LTR	REVISION RECORD	DATE	DWN	APVD
	E	ECR-10-019701	9-2010	MY	GB

DIMENSIONS: INCHES

TOLERANCES UNLESS OTHERWISE SPECIFIED:
0 PLC ± -
1 PLC ± -
2 PLC ± .25
3 PLC ± -
4 PLC ± -

ANGLES ± -
SURFACE TEXTURE

DWN M. O'BRINE	1-31-96	MATERIAL - -
CHK C. ERISMAN	1-31-96	HEAT TREAT - -
APVD T. ELBIN	1-31-96	Tyco Electronics Corporation Harrisburg, PA 17105-3608

NAME SIDE FEED HDM APPLICATOR

SCALE	SIZE	DRAWING NO	SHEET	REV
-	A1	680263	1 OF 1	E

CUSTOMER ACCESSIBLE PRODUCTION DRAWING

LOC A
DIST 66

3308-8 (1/08)

THIS DRAWING IS A CONTROLLED DOCUMENT.
THIS DRAWING IS A CONTROLLED DOCUMENT
DWG NO 680263
THIS INFORMATION IS CONFIDENTIAL AND PROPRIETARY TO TYCO ELECTRONICS CORPORATION AND ITS WORLDWIDE SUBSIDIARIES AND AFFILIATES. IT MAY NOT BE DISCLOSED TO ANYONE OTHERWISE EXPRESSLY PERMITTED BY WRITTEN AUTHORIZATION FROM TYCO ELECTRONICS CORPORATION, HARRISBURG, PENNSYLVANIA USA.