MODEL NO.	PACKAGING
147-0701-201	ONE PCS PER BAG

REV	ECO	DATE
001	ECO-17-0032	11/28/2017

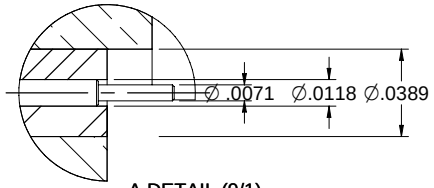

A DETAIL (9/1)

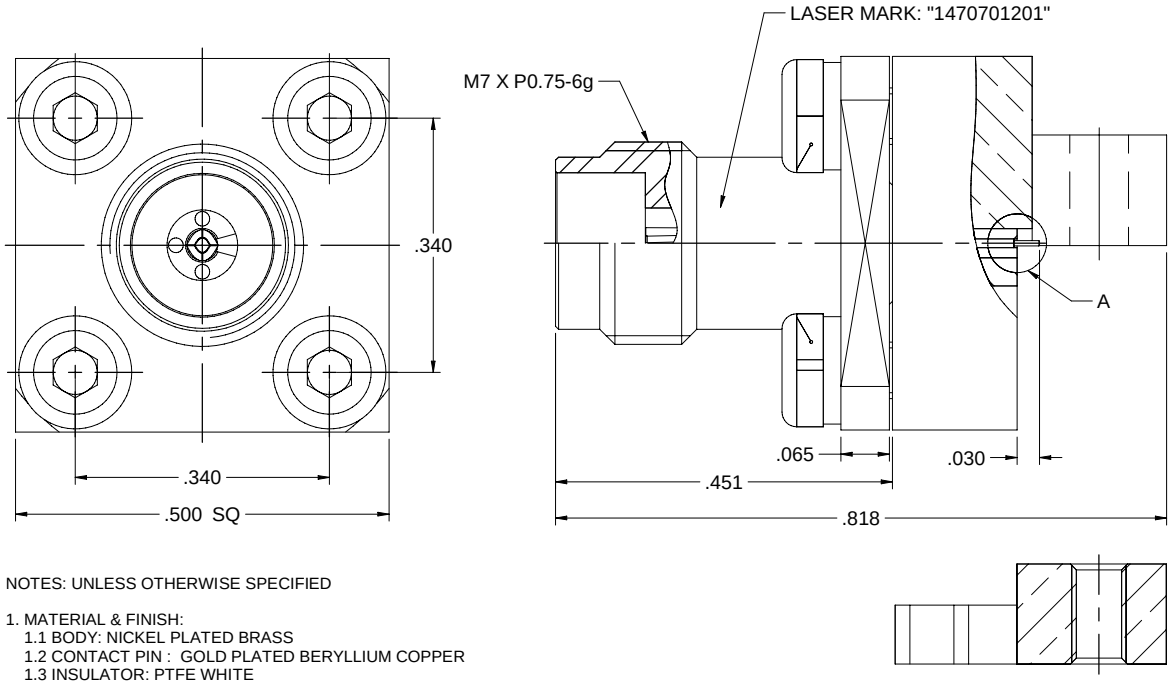

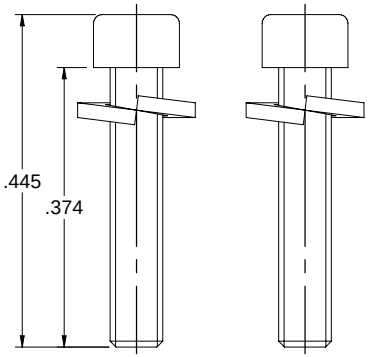

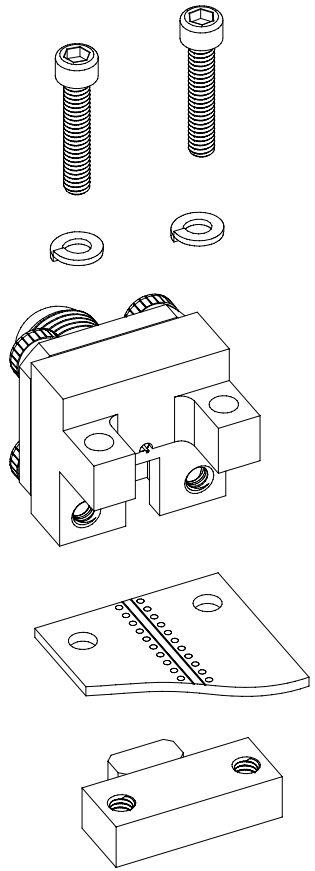

NOTES: UNLESS OTHERWISE SPECIFIED

1. MATERIAL & FINISH:
   1.1 BODY: NICKEL PLATED BRASS
   1.2 CONTACT PIN : GOLD PLATED BERYLLIUM COPPER
   1.3 INSULATOR: PTFE WHITE
   1.4 BOLT & WASHER: STAINLESS STEEL

2. ELECTRICAL:
   2.1 IMPEDANCE: 50 OHMS
   2.2 FREQUENCY RANGE: 0-50 GHz
   2.3 VOLTAGE STANDING WAVE RATIO: 1.2 MAX
   2.4 CONTACT RESISTANCE:
      2.4.1 CENER CONTACT: 6 MILLIOHM MAX
      2.4.2 OUTER CONTACT: 2.5 MILLIOHM MAX
   2.5 DIELECTRIC WITHSTANDING VOLTAGE: 500 VRMS MIN
   2.6 INSULATOR RESISTANCE: 5000 MEGOHM MIN

3. MECHANICAL:
   3.1 ENGAGEMENT/ DISENGAGEMENT FORCE: 0.23 NM MAX
   3.2 CONTACT RETENTION: 20 N MIN
   3.3 DURABILITY (MATING): 500 CYCLES MIN

4. ENVIRONMENT:
   4.1 THERMAL SHOCK: MIL-STD-202, METHOD 107, CONDITION B.
   4.2 OPERATING TEMPERATURE: -55 TO 125°C
   4.3 SALT SPRAY: MIL-STD-202, METHOD 101, CONDITION B
   4.4 SHOCK: MIL-STD-202, METHOD 213, CONDITION I
   4.5 VIBRATION: MIL-STD-202, METHOD 204, CONDITION D
   4.6 MOISTURE RESISTANCE: MIL-STD-202, METHOD 106

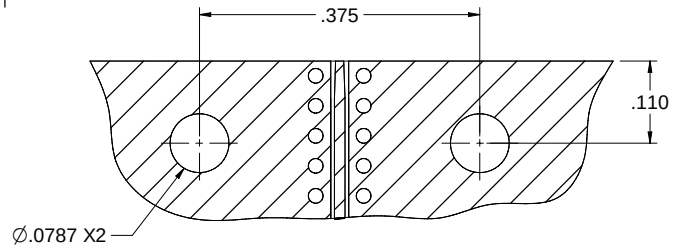

PCB LAYOUT

cinch connectivity solutions	Model No. 147-0701-201		Johnson
	RoHS2 ☑ 2011/65/EU	Cage Code	Title: END LAUNCH JACK, SCREW-ON TYPE,2.4mm
	UNLESS OTHERWISE SPECIFIED UNITS INCH	3RD ANGLE PROJECTION	Drawing No. 147-0701-201 — Rev. 001
	.XXX ±.02 .XXXX ±.01 ANGLES ±5°	Drawn By: Betty.Yu	
		Date: 10/19/2017	Size C — DO NOT SCALE DRAWING — Workmanship Std NONE — Sheet 1 of 1

THIS PROPRIETARY DOCUMENT is property of Cinch Connectivity Solutions. Information on this drawing, our specifications, and similar data is to be held in confidence and used for the sole benefit of CINCH CONNECTIVITY SOLUTIONS or its affiliates.
INTERPRET DRAWING IN ACCORDANCE WITH ASME Y14.5-2009.