THIS DRAWING IS UNPUBLISHED. RELEASED FOR PUBLICATION 20
© COPYRIGHT 20 BY TYCO ELECTRONICS CORPORATION. ALL RIGHTS RESERVED.

PART NUMBER	REV	FIRST USED	POWER UNIT	FEED TYPE	DESCRIPTION
1855258-1	A	122500-1	LEADMAKER	AIR FEED	CUTS CARRIER
1855258-2	A	565435-5	BENCH MODEL K	AIR FEED	CUTS CARRIER
1855258-3	A	354500-1	BENCH MODEL G	AIR FEED	CUTS CARRIER
7-1855258-7	A	-	-	-	SPARE PARTS

1. RECOMMENDED SPARE PARTS
2. GREASE LIGHTLY
3. GUARD MUST BE IN PLACE WHEN OPERATING APPLICATOR IN A BENCH MACHINE
4. INSTALL ITEMS 101, 102, AND 119 ON SIDE OF STRIPPER ON APPL HOUSING USING ITEM 21.

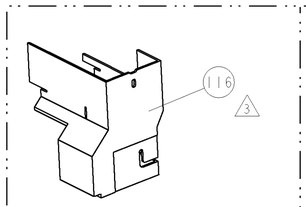

AMP-O-LECTRIC TERM GUARD

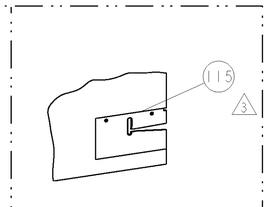

G TERMINATOR GUARD

TERMINAL NAME: TERMINAL, RING

TYCO PN	MFR PN	DELPHI TERM - DELPHI CRIMP SPECS			
1949337	2977821				
-	-		CRIMP HEIGHT	WIRE SIZE	REF SETTING
-	-		2.20±0.05mm[.086±.002]	0.80mm2	A7
-	-		2.10±0.05mm[.082±.002]	0.50mm2	B3
-	-		-	-	-
-	-		-	-	-
-	-	CRIMP	SIZE	TYPE	RANGE
-	-	WIRE	2.97mm [.117]	F	0.50-0.80mm2
-	-	INSUL	4.6mm [.170]	F	Ø2.69-3.13mm MAX
WIRE STRIP LENGTH 4.90-5.10mm	TERM APPL SPEC NONE	FEED 13.90mm	APPLICATOR INSTRUCTIONS 408-8040		SET UP GAGE 458637-1

LOC	DIST
A	66

REVISIONS

P	LTR	DESCRIPTION	DATE	DWN	APVD
	A	PRODUCT RELEASE	17MAY2007	CMR	TE

*** WARNING**
ON INSTALLATION, SET WIRE DISC TO LARGEST WIRE SIZE SETTING. USE OF SETTINGS BELOW MIN. REQUIRED CRIMP HEIGHT SETTING WILL CAUSE DAMAGE TO CRIMP TOOLING.

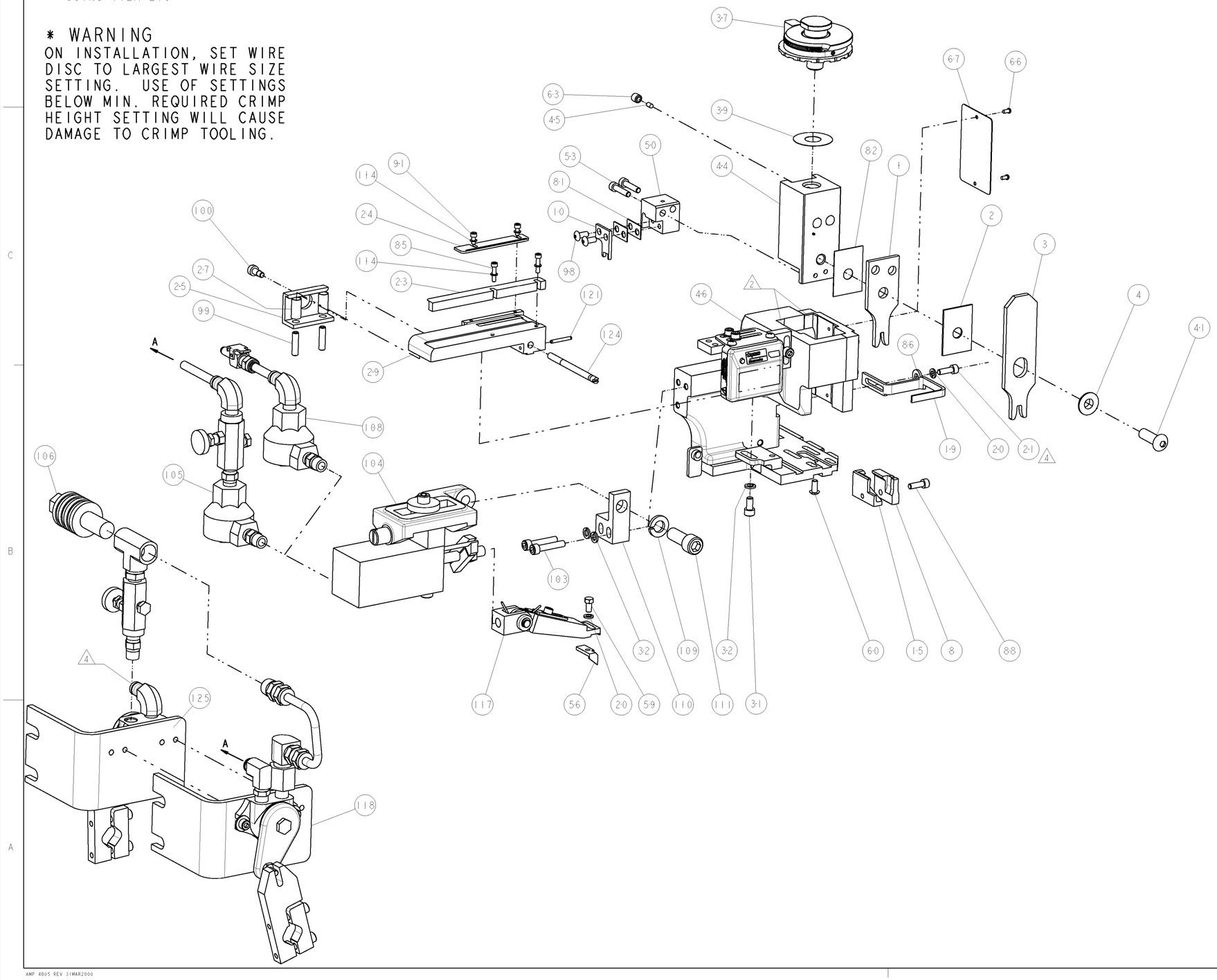

	-	-	1	-	-	455350-4	AIR BLAST ASS'Y	125
	-	1	1	1	-	690432-3	ADJUSTMENT SCREW	124
	-	1	1	1	-	4-21028-0	PIN, SLOTTED SPRING .094 X .750	121
4	-	18	24	18	IN	27319-4	TUBING, POLY-FLO, NATURAL	119
	-	-	1	-	-	692655-6	AIR FEED VALVE ASSEMBLY	118
	-	1	1	1	-	461062-1	FEED FINGER ASSEMBLY	117
3	-	-	REF	-	..	455749-1	GUARD WINDOW	116
3	-	REF	-	-	..	679532-1	INSERT, GUARD	115
	-	4	4	4	-	21024-2	WASHER, SPRG LOCK, REG NO 4	114
	-	1	1	1	-	3-21001-5	SCR, SKT HD CAP 3/8-16 X 1.000	111
	-	1	1	1	-	459610-1	MOUNT, FEED BRACKET	110
	-	1	1	1	-	21024-8	WASHER, SPRG LOCK, REG 3/8	109
	-	1	-	1	-	692655-7	AIR FEED VALVE ASSEMBLY	108
	-	-	1	-	-	24042-2	VALVE, SLEEVE, 3-WAY	106
	-	-	1	-	-	692655-5	AIR FEED VALVE ASSEMBLY	105
	-	1	1	1	-	461065-1	ASSEMBLY, AIR FEED	104
	-	2	2	2	-	3-21000-9	SCR, SKT HD CAP 10-32 X 1.000	103
4	-	1	1	1	-	986220-1	CLAMP, CABLE, BLACK	102
4	-	1	-	1	-	23238-1	INSERT, COUPLING	101
	-	1	1	1	-	22353-8	SCR, SHLD, SLOT HD, 3/16 DIA	100
	-	2	2	2	-	5-21006-6	SCR, SET, CUP POINT 10-32 X .750	99
	-	2	2	2	-	2-21002-1	SCR, BTN SKT HD CAP 8-32 X .375	98
	-	2	2	2	-	1-21000-3	SCR, SKT HD CAP 4-40 X .250	91
	-	1	1	1	-	2-21000-7	SCR, SKT HD CAP 8-32 X .500	88
	-	1	1	1	-	21055-7	WASHER, FLAT, REG NO 10	86
	-	2	2	2	-	1-21000-5	SCR, SKT HD CAP 4-40 X .500	85
	-	1	1	1	-	455888-4	SPACER, CRIMPER	82
	-	2	2	2	-	1-240641-7	SPACER	81
	-	1	1	1	-	4088040	SF APPL INST 408-8040	72
	-	1	1	1	-	217238-1	GENERAL INSTRUCTION PKG	71
	-	1	1	1	-	461264-5	PLATE, IDENTIFICATION	67
	-	2	2	2	-	21017-2	SCREW, DRIVE	66
	-	1	1	1	-	21009-2	SCR, SET, SELF LOCKING 1/4-20 X .250	63
	-	1	1	1	-	22733-8	SCR, BHSC, SELF-LOCKING, 8-32 X .375	60
	-	1	1	1	-	2-22603-0	SCR, HEX HD CAP 8-32 X .312	59
	-	1	1	1	-	3-694433-9	FEED PAWL	56
	-	2	2	2	-	2-21000-9	SCR, SKT HD CAP 8-32 X .750	53
	-	1	1	1	-	1583893-6	HOLDER, SLUG BLADE	50
	-	1	1	1	-	1633399-1	APPL., BASIC AIR FEED SUB ASSY	46
	-	1	1	1	-	690191-1	PLUG,NYLON	45
	-	1	1	1	-	455673-1	RAM, SIDE FEED	44
	-	1	1	1	-	7-21002-9	SCR, BTN SKT HD CAP 5/16-24 X 1.00	41
	-	1	1	1	-	690125-1	SHIM SUB-ASSY	39
	-	1	1	1	-	879103-2	FINE ADJUST HEAD ASSEMBLY	37
	-	3	3	3	-	21024-5	WASHER, SPRG LOCK, REG NO 10	32
	-	1	1	1	-	3-21000-4	SCR, SKT HD CAP 10-32 X .375	31
	-	1	1	1	-	2-844048-6	PLATE, REAR STRIP GUIDE	29
	-	2	2	2	-	22281-9	SPRING, COMPRESSION	27
	-	1	1	1	-	356835-1	LEVER, DRAG RELEASE	26
	-	1	1	1	-	240792-1	DRAG, TERMINAL	25
	-	1	1	1	-	1-690438-5	FRONT STRIP GUIDE	24
	-	1	1	1	-	2-189124-1	GUIDE, FRONT STRIP	23
	-	1	1	1	-	2-21000-7	SCR, SKT HD CAP 8-32 X .500	21
	-	2	2	2	-	21024-4	WASHER, SPRG LOCK, REG NO 8	20
	-	1	1	1	-	1-456468-1	STRIPPER, SPECIAL	19
1	-	1	1	1	-	1-1633124-1	PLATE, REAR SHEAR	15
1	1	1	1	1	-	1583859-5	BLADE, SLUG	10
1	1	1	1	1	-	1633507-9	ANVIL, SPECIAL, COMBINATION	8
	-	1	1	1	-	2-238009-9	BLOCK, FL CRIMPER SPACER	4
1	1	1	1	1	-	4-1633471-6	CRIMPER, INSULATION F	3
	-	1	1	1	-	1-455888-0	SPACER, CRIMPER	2
1	1	1	1	1	-	9-1633305-0	CRIMPER, WIRE PREMIUM	1
	-77	-3	-2	-1	U/M	PART NO	DESCRIPTION	ITEM NO

THIS DRAWING IS A CONTROLLED DOCUMENT FOR TYCO ELECTRONICS CORPORATION. IT IS SUBJECT TO CHANGE AND THE CONTROLLING ENGINEERING ORGANIZATION SHOULD BE CONTACTED FOR THE LATEST REVISION.

DIMENSIONS: INCHES

TOLERANCES UNLESS OTHERWISE SPECIFIED:
0 PLC ±
1 PLC ±0.1
2 PLC ±0.01
3 PLC ±0.001
4 PLC ±0.0001
ANGLES ±

MATERIAL - - -
FINISH - -

DWN 11APRIL2007 C REICHELDERFER
CHK 11APRIL2007 T ELBIN
APVD 11APRIL2007 T BENCHOFF
PRODUCT SPEC -
APPLICATION SPEC -
WEIGHT -

tyco Electronics
Tyco Electronics
Harrisburg, PA 17105-3608

NAME FINE ADJUST SIDE FEED HDM APPLICATOR -

SIZE	CAGE CODE	DRAWING NO	RESTRICTED TO
A1	00779	C-1855258	-

CUSTOMER DRAWING | SCALE 3:5 | SHEET 1 OF 1 | REV A

CUSTOMER VIEWABLE ASSEMBLY