VIEW ON MATING SIDE

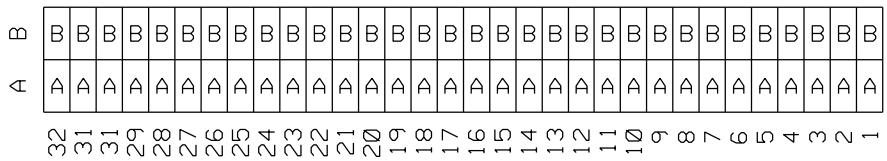

A = 32 CONTACTS L=2,8
B = 32 CONTACTS L=2,8

S = 64 TOTAL NUMBER OF CONTACTS

Marking	Standard
Performance level	G2/0 = Contact area level2 / Termination tin
Flux proof	no
Fixing clip	yes
Dimensions	SDA-85050-0001 sht.1
Technical Data	PS-85052-0001

B	G2/0	b1-32
A	G2/0	a1-32
Contact symbol	Perform. level	Contact position number

LTR	REVISIONS	
A	ECN 2469 first release	

FOR PREVIOUS REVISIONS SEE MRI LIST

UNLESS OTHERWISE SPECIFIED TOLERANCES: ANGULAR ±2°

	INCH	METRIC
3 PLACE	± .	±
2 PLACE	± .	±
1 PLACE	± .	±

DRAFT WHERE APPLICABLE MUST REMAIN WITHIN DIMENSIONS

DESIGN DIMENSION ☐ MM ☐ IN.

EQUIVALENT DIMENSION ☐ MM ☐ IN.

IF TWO DIMENSIONS ARE SHOWN THE UPPER IS THE DESIGN DIMENSION, LOWER IS SECONDARY

DRWG BY	KN	SIGN
CHK'D BY	Ca	SIGN
APP'D BY	JB	SIGN
SCALE		

REVISE ONLY ON CAD SYSTEM | SH. | REV.

CADCAM PROJECT NAME s8505001 s11

THIS DRAWING CONTAINS INFORMATION THAT IS PROPRIETARY TO MOLEX INC. & SHOULD NOT BE USED WITHOUT WRITTEN PERMISSION

TITLE

64 pos. female connector acc. DIN 41612 style Q contacts arrangement

MOLEX EUROPE

SHEET NO. 1 OF 1

DATE 97/04/22

PART NO. 85050-0115

DWG NO. SD-85050-0115

SIZE A

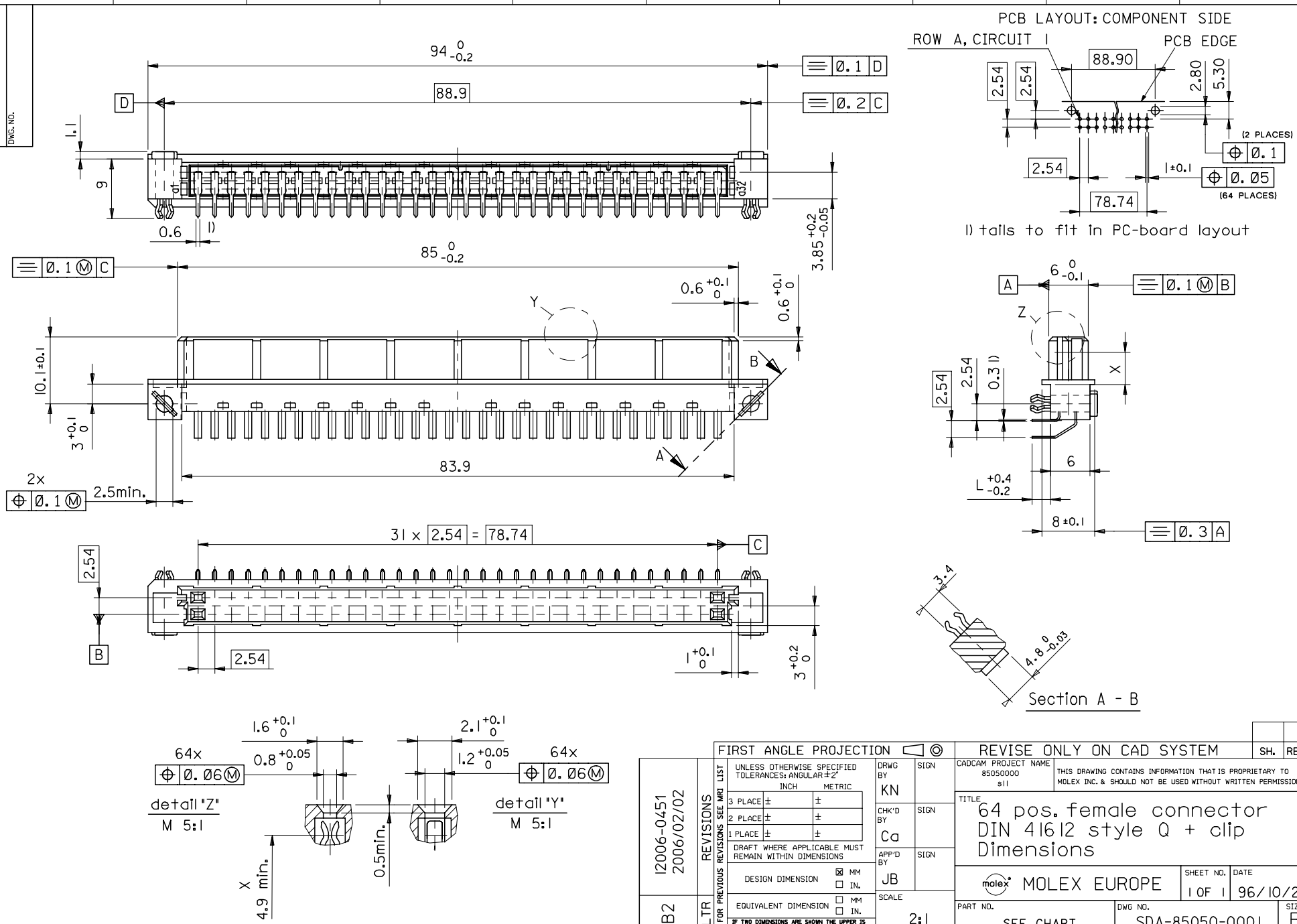

FIRST ANGLE PROJECTION			REVISE ONLY ON CAD SYSTEM	SH.	REV.
UNLESS OTHERWISE SPECIFIED TOLERANCES: ANGULAR ±2°	DRWG BY KN	SIGN	CADCAM PROJECT NAME 85050000 s11	THIS DRAWING CONTAINS INFORMATION THAT IS PROPRIETARY TO MOLEX INC. & SHOULD NOT BE USED WITHOUT WRITTEN PERMISSION	
3 PLACE ± ±	CHK'D BY Ca	SIGN	TITLE 64 pos. female connector DIN 41612 style Q + clip Dimensions		
2 PLACE ± ±	APP'D BY JB	SIGN	MOLEX EUROPE	SHEET NO. 1 OF 1	DATE 96/10/22
1 PLACE ± ±	SCALE 2:1		PART NO. SEE CHART	DWG NO. SDA-85050-0001	SIZE B
DRAFT WHERE APPLICABLE MUST REMAIN WITHIN DIMENSIONS					
DESIGN DIMENSION ☒ MM ☐ IN.					
EQUIVALENT DIMENSION ☐ MM ☐ IN.					
IF TWO DIMENSIONS ARE SHOWN THE UPPER IS THE DESIGN DIMENSION, LOWER IS SECONDARY					

REVISIONS: 12006-0451 2006/02/02 — LTR B2

FOR PREVIOUS REVISIONS SEE MRI LIST

PART NO. DWG. NO.

7132-1283