THIS DRAWING IS UNPUBLISHED. RELEASED FOR PUBLICATION 2012
© COPYRIGHT 2012 Tyco Electronics AMP GmbH ALL RIGHTS RESERVED.

LOC	DIST
A1	-

REVISIONS

P	LTR	DESCRIPTION	DATE	DWN	APVD
	B	INITIAL RELEASE	15MAY2012	BM	GS
	C	ECR-12-011811	03JUL2012	wi	wi

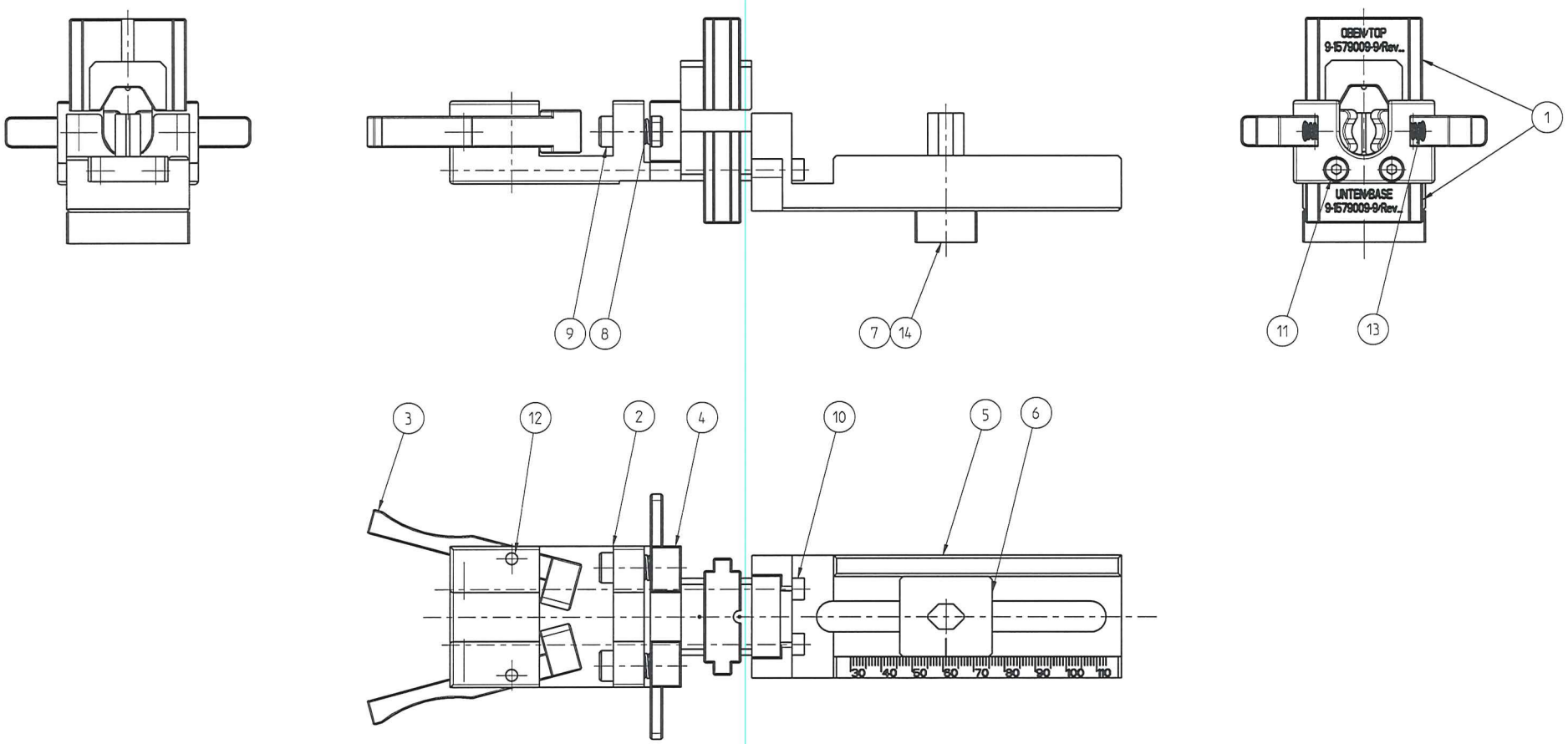

Einsatz mit hydraulischer Handzange HPi10 TE PN 9-1579009-1 verwendbar
Die set used in combination with hydraulic hand tool HPi10 TE PN 9-1579009-1

THIS DRAWING IS A CONTROLLED DOCUMENT.

DIMENSIONS: mm

TOLERANCES UNLESS OTHERWISE SPECIFIED:
0 PLC ±±±±
1 PLC ±±±±
2 PLC ±±±±
3 PLC ±±±±
4 PLC ±±±±
ANGLES ±1°
FINISH -

MATERIAL -

DWN B.MUTH 15MAY2012
CHK G.STEGMAYER 15MAY2012
APVD G.STEGMAYER 15MAY2012
PRODUCT SPEC -
APPLICATION SPEC -
WEIGHT -

TE Connectivity

NAME DIE SET IPT-VW SHIELD CRIMP 50 SQMM
MATRIZE IPT-VW SCHIRMCRIMP 50 QMM
-

SIZE	CAGE CODE	DRAWING NO	RESTRICTED TO
A2	00779	C-1-528041-1	-

CUSTOMER DRAWING SCALE 1:1 SHEET 1 OF 2 REV C

1471-9 (3/11)

POS	QTY	TE/PN	REV	DESCRIPTION	S=Spare Parts W=Wear Parts S	W
1	1	9-1579009-9	A	DIE SET SHIELD 50 MATRIZE SCHIRMCR 50 QMM	☑	☑
2	1	8-0519705-4	B	HOLDER IPT SOCKET CONTACT HALTER IPT BUCHSE	☑	☑
3	2	2-0519680-1	A	JAW BACKE	☑	☑
4	1	8-0519714-9	A	STOP PLATE ANSCHLAGPLATTE	☑	☐
5	1	2-0519715-4	B	HOLDER HALTER	☑	☑
6	1	5-0519702-3	A	STOP IPT16/50MM²LO.ANSCHLAG IPT 16/50MM² LANGVER.	☑	☑
7	1	9-0519695-9	A	PLATE 70/95/120MM² PLATTE F. IPT KABEL	☑	☑
8	2	8-0659650-5	A	SPRING, COMPRESSION	☑	☑
9	2	0-0519152-2	A	PASSCHR. 6 M5*12 UPS -12.9	☑	☐
10	2	2-0519000-4	A	ZYLINDERSCHR. M4*20 DIN 912 -10.9 GAL NI	☑	☐
11	2	0-0519072-7	A	ZYLINDERSCHR. M4*80 DIN 912 -10.9 GAL NI	☑	☑
12	2	5-0519051-4	A	ZYL.-STIFT 4M6*26 DIN 6325 -ST	☑	☑
13	2	0-0510500-2	A	SPRING, COMPRESSION	☑	☑
14	1	4-0519000-3	A	ZYLINDERSCHR. M6*20 DIN 912 -10.9 GAL NI	☑	☐

REMARKS: FOR HYDRAULIC CRIMPING HAND TOOL/FÜR HYDRAULIK HANDCRIMPZANGE PN PN 9-1579009-1

USED ON
9-1579009-1-A

P	LTR	REVISION RECORD	DATE	DWN	APVD
-	A	SEE SHEET 1	-	-	-
-	B	SEE SHEET 1	-	-	-
-	C	SEE SHEET 1	-	-	-
-	-	-	-	-	-

PRINTED	DWN	CHK	APVD
03JUL12	03JUL12 C.WITT	-	-
WEIGHT	**DIMENSION (mm)**	**MATERIAL**	**HT TR**
-	-	-	-

TOLERANCES UNLESS OTHERWISE SPECIFIED SEE SHEET 1

TE Connectivity

SPARE AND WEAR PARTS LIST

NAME DIE SET IPT-VW SHIELD CRIMP 50 SQMM_

RESTRICTED TO

SCALE	SIZE	DRAWING NO	SHEET	REV
SEE SHEET 1	A4	C-1-528041-1	2/2	C

THIS DRAWING IS A CONTROLLED DOCUMENT FOR TYCO ELECTRONICS CORPORATION. IT IS SUBJECT TO CHANGE AND THE CONTROLLING ENGINEERING ORGANIZATION SHOULD BE CONTACTED FOR THE LATEST REVISION.

DIESES ZEICHNUNGSDOKUMENT WIRD DURCH TYCO ELECTRONICS CORPORATION KONTROLLIERT. ÄNDERUNGEN DIE DEM TECHNISCHEN FORTSCHRITT DIENEN, SIND VORBEHALTEN. DEN JEWEILS LETZTGÜLTIGEN ÄNDERUNGSSTAND ERFAHREN SIE AUF ANFRAGE